1. Place tge covers on the brackets.

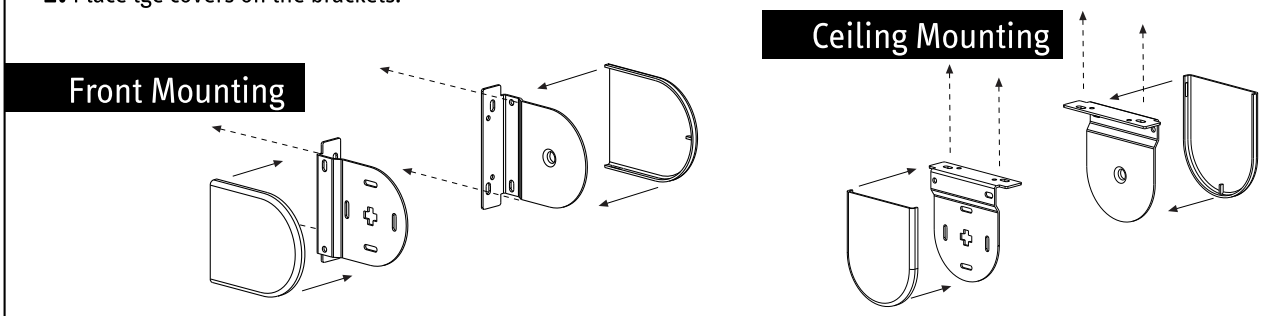

2. With a pencil, mark the place of 1 holder, drill with a tool the size of the bushing's diameter and place the respective bushings.
Afterwards, place the holder and fix it with the screws.

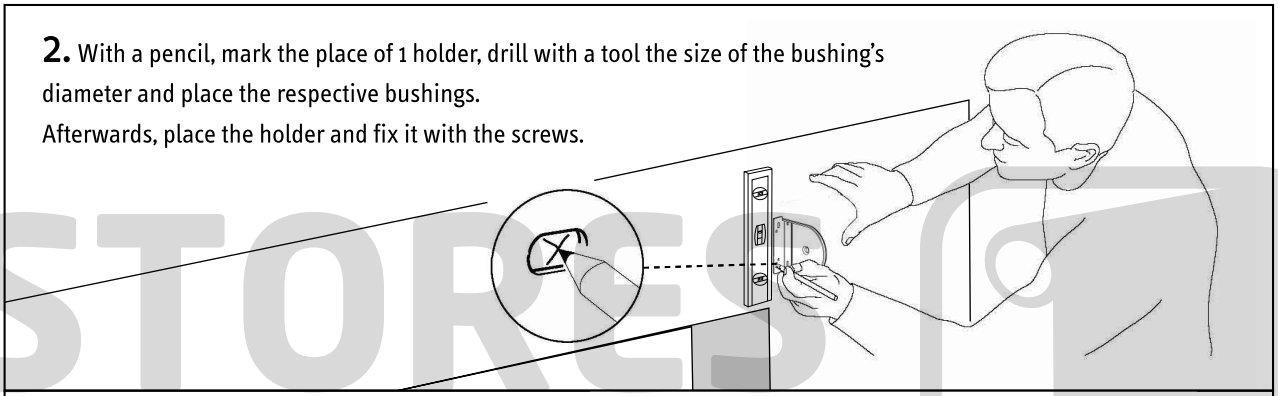

3. With the help of a measuring tape, a pencil and a level, mark the place of the second holder, drill with a tool the size of the bushing's diameter and place the respective bushings.
Afterwards, place the holder and fix it with the screws.

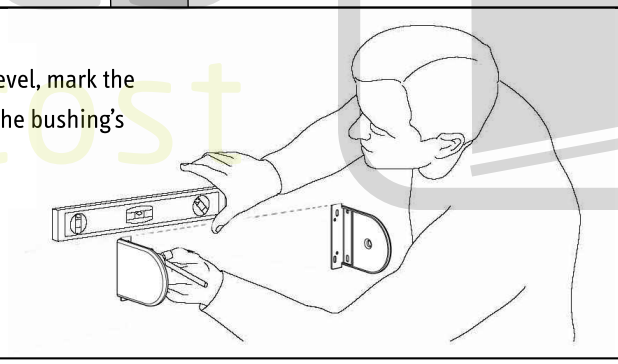

4. Start by inserting the side of the command in the respective holder, and then with the help of a screwdriver retract the end plug and insert it in the respective slot.

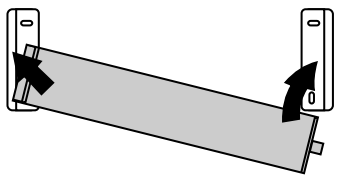

1º Inserting the side of the command in the respective holder

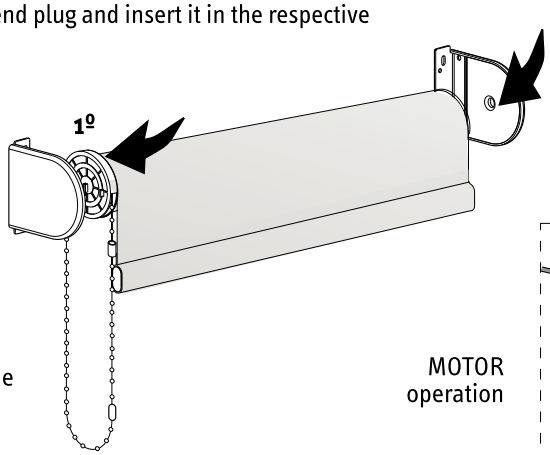

2º Retract the end plug. Insert the end plug in respective slot

3º Until you hear a ckick

MOTOR operation

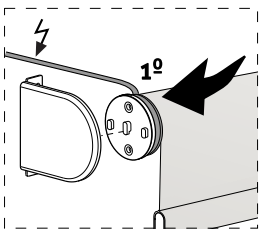

©ESTORES LOWCOST 06/2020